Operating Instructions

Microphone Disinfector

LLMD01

ENGLISH

August 2023
Version 1.04f

English

Copyright © 2022, 2023 by LAC Labs GmbH

Authors: Martin „Malle“ Beßler, Tobias Hoff

www.lilac.works

Table of contents

1 General Notes 5

1.1 ....What exactly is the Li.LAC Microphone Disinfector? 5

1.2 ....Manufacturer Information 5

1.3 ....Revisions 5

1.4 ....Copyright 6

1.5 ....Prior to First Use 6

1.5.1 On this Manual 6

1.5.2 Legal Notice and proof of efficacy 6

1.5.3 Wear and Tear by Disinfection 7

1.6 ....Symbols and Signal Words 7

1.7 ....Documentation and Information 7

1.7.1 Internet 7

2 Product Description 8

2.1 ....Components 8

2.1.1 Front View 8

2.1.2 Rear View 8

2.1.3 3D-View 9

2.1.4 Technical Data 10

2.1.5 Scope of Delivery 11

2.1.6 Installation Instructions 11

3 Safety Instructions 12

3.1 ....General Safety Notes 12

3.2 ....Safe Use of the Product 12

3.2.1 General Safety 12

3.2.2 Intended Use 13

3.2.3 Foreseeable Misuse 13

3.2.4 Target Group 13

3.2.5 Usage Environment 13

3.2.6 Safety during Use 13

13

3.2.7 Safety during Maintenance 13

4 Commissioning 14

4.1 ....Connect / Switch on 14

4.2 ....Inserting Microphones 14

4.3 ....Inserting Headsets and Clip-on Microphones. 15

4.4 ....Starting the Disinfection 16
4.5 ....End of Disinfection 16
4.5.1 Removing the Microphones 16
4.6 ....Switching off 16
4.7 ....Premature Stop of Disinfection 16
4.8 ....Transport and Storage 17
4.8.1 Using the Transport Lock 17
4.8.2 Storage 17
5 Troubleshooting 18
6 Maintenance 19
6.1 ....Who is permitted to perform Maintenance Work on Li.LAC? 19
6.2 ....Service Contact 19
6.3 ....Software Update 19
6.4 ....Cleaning the Irradiation Chamber 21
6.4.1 Removing the Drawer 21
6.4.2 Cleaning the Mirror Surfaces 21
6.5 ....Exchanging the UV-C Lamps 22
6.5.1 Opening the Device 22
6.5.2 Removing the UV-C Lamps 24
6.5.3 Installing new UV-C Lamps 25
6.5.4 Closing the device 26
6.5.5 First Start-up after UV-C Lamp Exchange 28
6.6 ....Maintenance Schedule 29
7 Disposal 30
7.1 ....Disposal of UV-C lamps 30
7.2 ....Safe handling of defective UV-C lamps 30
7.2.1 What should I do if the Glass of a UV-C Lamp is broken? 31
7.2.2 What should I do if the Glass of a UV-C Lamp is broken on a Smooth Surface (laminate floor, parquet floor)? 31
7.2.3 What should I do if the Glass of a UV-C Lamp is broken on a Carpet? 31
8 Appendix 32
8.1 ....Spare Parts and Consumables 32
9 Declaration of Conformity 33

1 General Notes

1.1 What exactly is the *Li.LAC* Microphone Disinfector?

The *Li.LAC* microphone disinfector (in the following abbreviated as *Li.LAC*) is used to disinfect microphones (wired and wireless), belt packs, clip-on microphones and headsets. *Li.LAC* uses ultraviolet radiation of category C for disinfection. The disinfection efficacy is dependent on exposure time, intensity, radiation wavelength, and the corresponding microorganism's resistance to certain radiation. Visit our website for further information:

https://lilac.works/faq/

1.2 Manufacturer Information

LAC Labs GmbH
Krummenau 4
53577 Neustadt (Wied)
Germany
phone: +49-2683-9738938
e-mail: info@lac-labs.de
WEEE-Reg.-Nr. DE 88093759
EPA Est. No.: 102837-DEU-1

Li.LAC and the Li.LAC logo are registered trade marks within the EU.

The design of Li.LAC is registered and protected under the EUIPO community design 008243745-0001.

1.3 Revisions

Date	Version	Changes to the document
02/2021	1.0	Original
03/2021	1.01	Update
06/2021	1.03	Update ch. 6.5.4, ch. 4.2.3, general warning messages, minor layout changes
01/2022	1.04b	Updated DoC
05/2023	1.04c	Minor corrections
06/2023	1.04d	Updated legal notice
08/2023	1.04f	Updated DoC

1.4 Copyright

© Copyright 2022, 2023
All rights reserved.
Reprinting, including excerpts, is only permitted by LAC Labs.

1.5 Prior to First Use

1.5.1 On this Manual

This manual must be read and understood to ensure safe and proper use of this product. Keep this manual for future reference. The products are subject to steady further development. The manufacturer reserves the right to changes in shape, feature and technology. All information corresponds to technical standards at the time of printing. No claims on specific features of the product can be derived from the content of this manual.

1.5.2 Legal Notice and proof of efficacy

UV-C radiation does not ensure a 100 percent disinfection. A risk of infection can thus not be entirely excluded.

According to the proof of efficacy supplied by our testing laboratory (Opsytec Dr. Gröbel GmbH, 76275 Ettlingen, Germany), a 99.99 percent surface disinfection is achieved after 5 minutes of exposure, based on measured UV-C irradiance values inside Li.LAC*.

The departments Biomedical Engineering and Medical Microbiology & Infection Prevention of the University Medical Center Groningen (UMCG, the Netherlands) have conducted comprehensive scientific studies to evaluate the effectiveness of Li.LAC. Viruses** were sprayed onto microphones***, similar to singing into the mic. The results show a reduction of 99.3% of the viral load on strongly contaminated microphones (including the metal grille of the microphone and the foam underneath) after 10 minutes irradiation inside Li.LAC.

* Microbiological tests were not performed during these measurements. The exact disinfection level varies with the type of virus or bacteria and with the shape and the surface of the object to be disinfected.

** These studies were done using a M13 bacteriophage and then compared to the PR8 H1N1 influenza virus, which has a similar UV-C susceptibility as SARS-CoV-2. The detailed results of these studies have been published in the magazine “applied sciences”:
https://www.mdpi.com/2076-3417/12/14/7239

*** Industry standard vocal microphones (Sennheiser MD835) were used for these studies.

1.5.3 Wear and Tear by Disinfection

Exposure to UV-C radiation leads to premature material aging of the disinfected microphones. It is therefore up to the individual decision of the user whether s/he would like to accept the disadvantage of accelerated material aging for the benefit of disinfection. The manufacturer also refers the customer to the test results and instructions on the website www.lilac.works/faq and to follow the instructions provided by the microphone manufacturer.

1.6 Symbols and Signal Words

These instructions for use are structured according to *DIN EN 82079-1* and *ANSI Z 535* standards. This section provides an overview of the symbols and signal words used for product safety.

Danger:	Indicates an immediate dangerous situation that will result in death or serious injury if not avoided.
Warning:	Indicates a possible dangerous situation that can result in death or serious injury if not avoided.
Caution:	Indicates a possible dangerous situation that can result in minor injury if not avoided.
Notice:	Indicates a possible dangerous situation that can result in material and environmental damage if not avoided

Following symbols are used:

Danger / Warning – risk of death or injury

Warning – UV-C-radiation

Warning – high voltage / risk of electric shock

Warning – biological hazard

General notice to avoid damage to the device

1.7 Documentation and Information

1.7.1 Internet

For the latest edition of this operating instructions see our website:

https://lilac.works/downloads/

2 Product Description

2.1 Components

2.1.1 Front View

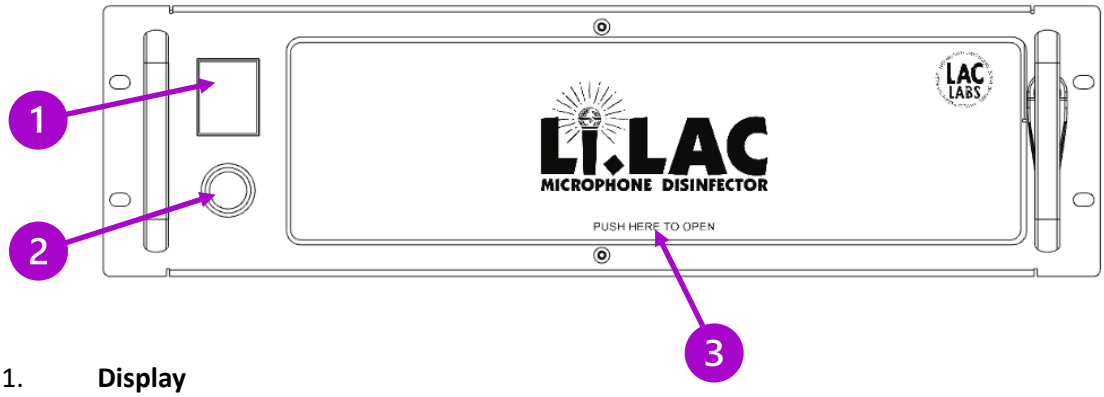

1. **Display**
2. **Encoder wheel**
3. **Irradiation chamber with drawer mechanics**

2.1.2 Rear View

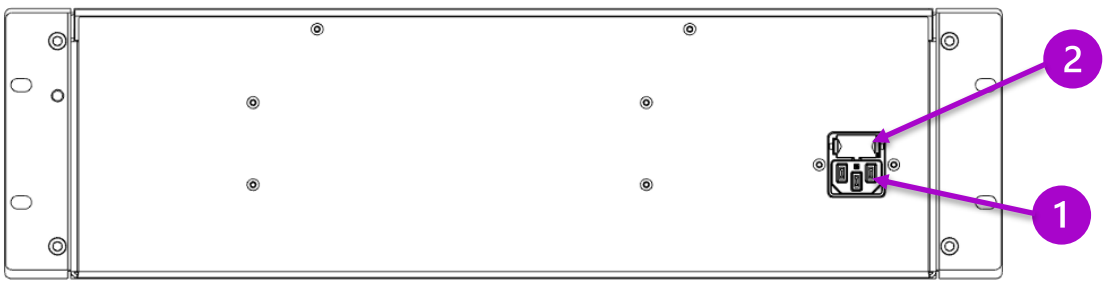

1. **Mains supply** – 110V-240V~ or 220V-240V~
2. **Fuse** – protects the device from power overload.

2.1.3 3D-View

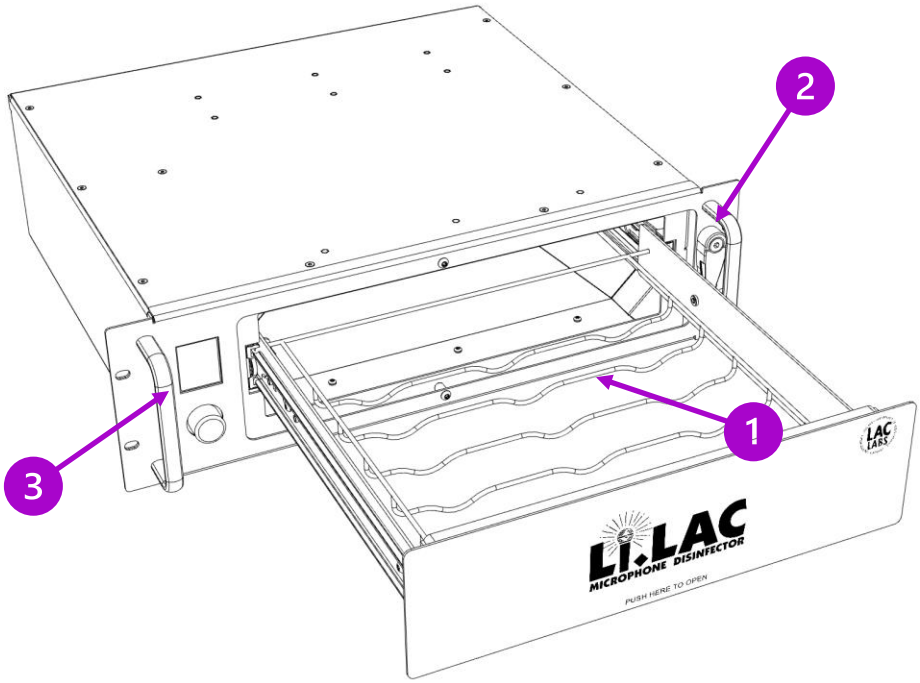

1. **Metal grille** – place microphones here
2. **Transport lock**
3. **Handle**

2.1.4 Technical Data

Temperature range:	0°C to +45°C
Mains supply:	110V-240V~ or 220V-240V~ ±10%, 50-60Hz, 40W
Lamps:	2x OSRAM Puritec HNS 16W G5 or 2x Philips TUV TL-Mini 16W G5
UV-C wavelength:	254nm

Irradiance:

Measuring position (Fig 1)		Irradiance * E	Irradiation dose H after **5** minutes	Irradiation dose H after **10** minutes
1	Front of microphone head	>3000 µW/cm²	>900 mJ/cm²	>1800 mJ/cm²
2	Side of microphone head	>800 µW/cm²	>240 mJ/cm²	>480 mJ/cm²
3	Microphone shaft	>350 µW/cm²	>105 mJ/cm²	>210 mJ/cm²

*according to test report of laboratoy Opsytec Dr. Gröbel GmbH, 76275 Ettlingen, 12/30/2020.

Certification:

001064
D-PL-20284-01-00
2020-12

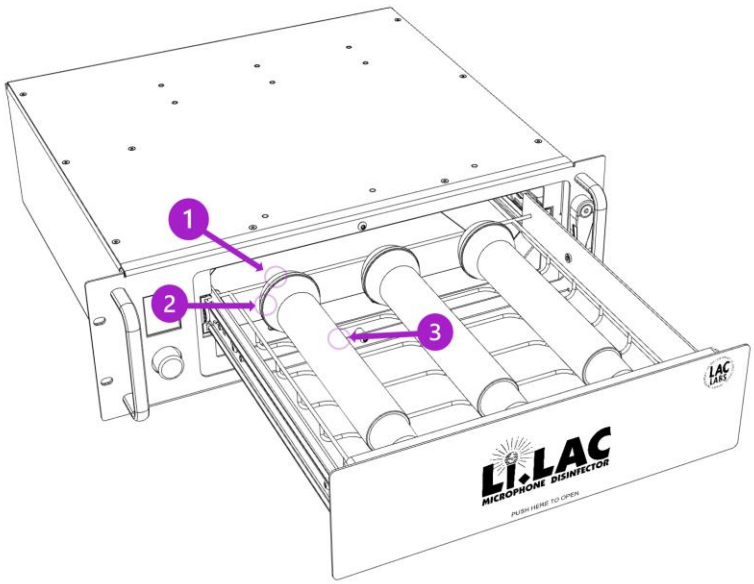

Fig. 1

Average lifetime of UV-C lamps: 9000 operating hours (according to lamp manufacturer)

<u>Note:</u> **Due to frequent activation / deactivation the lamps in *Li.LAC* can age faster. We recommend replacing the lamps after 4000 disinfection cycles.**

Dimensions (W/H/D): 482mm x 132mm x 390mm (430mm including handles)

19" 3U rack format

Weight: 11.5 kg

Measurements (in mm):

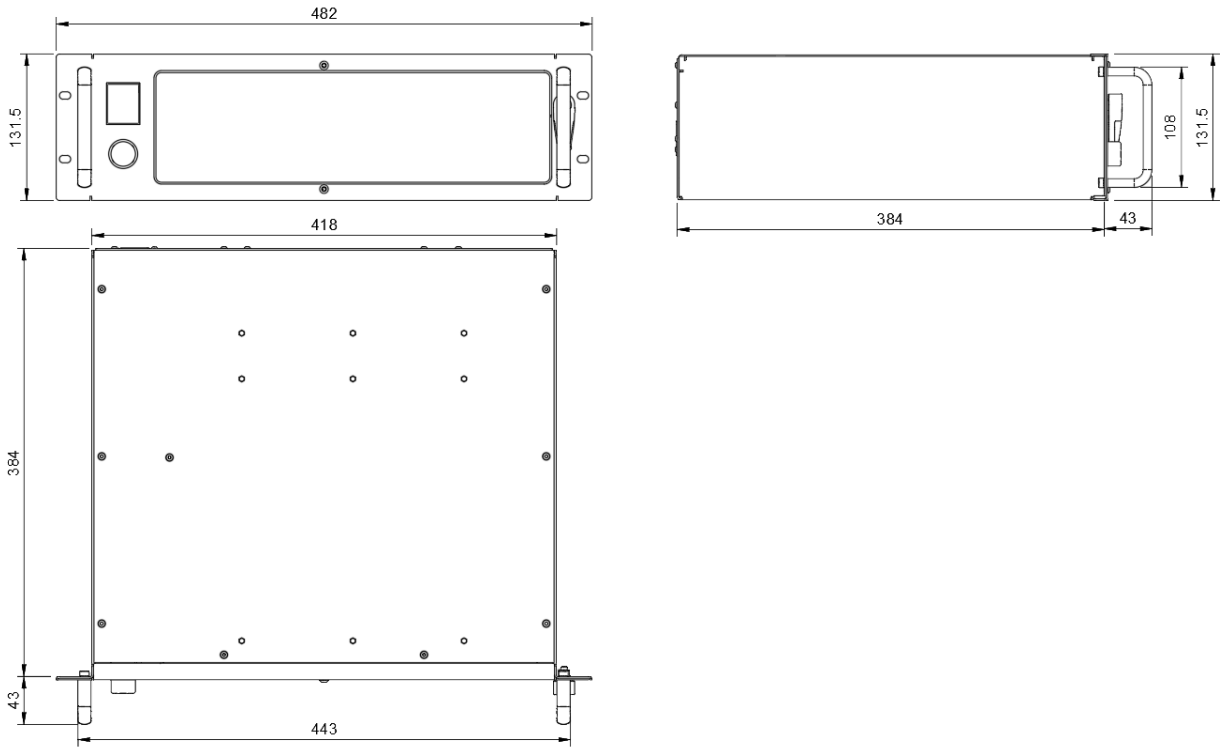

2.1.5 Scope of Delivery

1x *Li.LAC* microphone disinfector

1x mains cable

1x this manual

1x (optional) cable tray and spiral spring for small microphones

2.1.6 Installation Instructions

Li.LAC is rack mountable. Due to a mounting depth of 390mm we recommend using a rack tray or rack rails to support the rear of *Li.LAC*.

3 Safety Instructions

3.1 General Safety Notes

1. READ this manual.
2. KEEP this manual for further reference.
3. ADHERE to all safety messages.
4. The device can only be operated safely and properly when this manual is READ, UNDERSTOOD and ADHERED TO.
5. CHECK the device for damages before each use.
6. DO NOT USE in humid conditions.
7. DO NOT USE in close proximity to heat sources.
8. KEEP mains power cable from being crushed.
9. ONLY USE accessories supplied by manufacturer.
10. DO NOT MODIFY the device.
11. DISCONNECT the device from mains before any maintenance work.

3.2 Safe Use of the Product

3.2.1 General Safety

CAUTION. UV-C- radiation. Potential health hazard. Do not modify the device. Do not switch off safety-shutdown.

CAUTION. Microphones may be contaminated prior to disinfection. Wear disposable gloves and surgical mask.

We explicitly emphasize that the irradiation chamber of *Li.LAC* is impermeable for UV-C radiation. When used as instructed, no harmful UV-C radiation can escape from the irradiation chamber. If opened before the disinfection is complete, the UV-C lamps shutdown automatically. This feature can only be guaranteed if the user refrains from modifying the housing, the safety shutdown mechanism or other parts of the device. The manufacturer cannot be held liable for consequences resulting from modification, e.g. uncontrolled release of UV-C radiation.

3.2.2 Intended Use

Li.LAC is explicitly intended for the purpose of disinfection of microphones (handheld, clip-on or headset microphones) and belt packs of wireless microphones.

3.2.3 Foreseeable Misuse

Do not open or modify the device. Maintenance may only be carried out by specialized personnel.

3.2.4 Target Group

Li.LAC is targeting professional users of microphones in theaters, concert venues, recording studios, congress centers, radio and TV stations or audio rental companies.

3.2.5 Usage Environment

1. Only use in arid surroundings. Keep away from humidity.
2. Only use in temperature range of 0°C to 45°C.
3. Keep away from heat sources (Open fire, heating unit).
4. Set up horizontally, otherwise inserted microphones can block the drawer mechanism of the irradiation chamber.

3.2.6 Safety during Use

	DANGER. High Voltage. Risk of electric shock. Do not open device. Only use in dry surroundings.
	CAUTION. Microphones may be contaminated prior to disinfection. Wear disposable gloves and surgical mask.

3.2.7 Safety during Maintenance

	DANGER. High Voltage. Risk of electric shock. Disconnect device from mains.
	CAUTION. Lamp contains mercury. Health hazard. Avoid direct skin contact.
	WARNING. Ultraviolet radiation. Health hazard. Disconnect device from mains before opening.

4 Commissioning

4.1 Connect / Switch on

Li.LAC automatically boots after being connected to mains power.

4.2 Inserting Microphones

Notice. Batteries can stay in microphones and beltpacks without damage.

1. Turn latch 90° counterclockwise to unlatch transport lock. (Fig. 2)

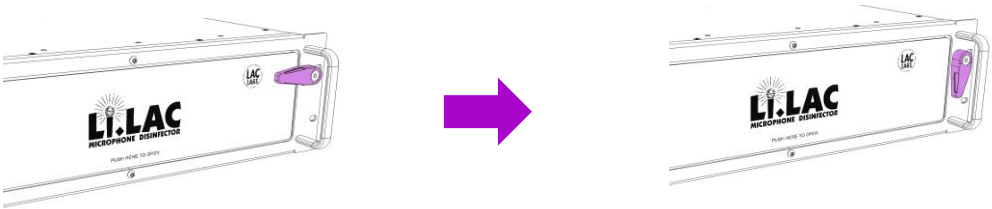

Fig. 2

2. Push at the center of the drawer of the irradiation chamber. LED lighting inside the chamber turns on automatically. "OPEN – Place microphones inside and close chamber" is indicated in the display.

CAUTION. Microphones may be contaminated prior to disinfection. Wear disposable gloves and surgical mask.

NOTICE: UV-C lamps are shut off when the drawer of the irradiation chamber is opened.

3. Place microphones inside drawer with the head of the microphone facing the marking (Fig .3a and 3b).

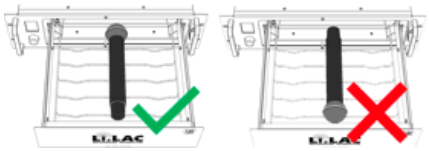

Fig. 3a

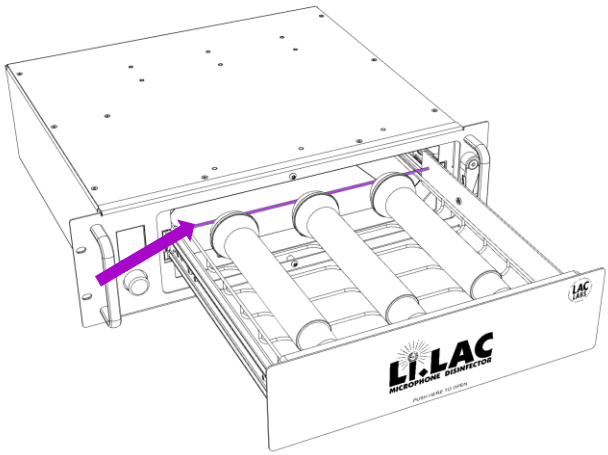

Fig. 3b

4. Close the drawer until it clicks into place.
5. The display shows the main menu and the selection of disinfection time.

4.3 Inserting Headsets and Clip-on Microphones.

⚠	**CAUTION.** Spiral spring. Risk of bruising. Insert and remove spiral spring carefully. Keep fingers from getting caught in the spiral spring.

!	**Notice.** Coiled cables are blocked from radiation. Blocked radiation results in reduced disinfection effect. Disinfect coiled cables additionally with disinfectant solution.

Use the cable tray and the spiral spring to insert small microphones. Cable tray and spiral spring are available separately.

1. Put the cable tray onto the metal grille. (Fig. 4, 1). The cable tray is fixed magnetically.
2. Insert the spiral spring in the area of the first cross bar (Fig. 4, 2).

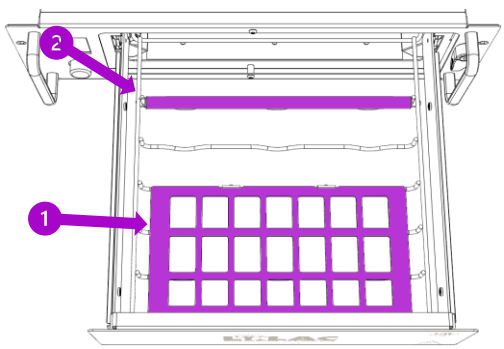

Fig. 4

3. Fix the head of the clip-on microphone or headset in the spiral spring (Fig. 5).
4. Place the cable of the microphone on the cable tray.

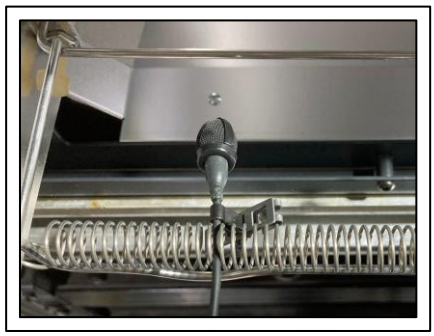

Fig. 5

4.4 Starting the Disinfection

1. Turn the encoder wheel to select disinfection time: **5 or 10 minutes.** (For further information on irradiation and radiant exposure see 2.1.4 "Irradiance", page 10).

   Note: The UV-C lamps emit a lower irradiance when cold. If *Li.LAC* is not used for longer than 1 minute preheating is necessary. This pre-heat time of 1 or 2 minutes is added to the selected disinfection time.

2. Push the encoder wheel to start disinfection.
3. A countdown is shown in the display (selected disinfection time + potential pre-heat time).

4.5 End of Disinfection

1. Disinfection ends automatically after the selected disinfection time has expired.
2. The display turns green. "Disinfection complete. Open chamber to continue" is shown in the display.

4.5.1 Removing the Microphones

1. Open the drawer of the irradiation chamber by pushing its center.
2. Remove microphones.
3. Close drawer of the irradiation chamber.
4. Push the center of the drawer of the irradiation chamber to lock.

4.6 Switching off

Separate the device from the mains to switch it off.

4.7 Premature Stop of Disinfection

1. If the drawer of the irradiation chamber is opened before the countdown has ended, the UV-C lamps are automatically deactivated, and disinfection stops.
2. "Opened too early!!! Close chamber to continue" is indicated in the display.
3. If you close the drawer again, the display shows the main menu of the disinfection time selection.

4.8 Transport and Storage

> Do not leave any objects inside the irradiation chamber. Impact from loose objects might damage the irradiation chamber.

4.8.1 Using the Transport Lock

1. Remove all objects from the irradiation chamber.
2. Close the drawer of the irradiation chamber.
3. Turn latch 90° clockwise to lock the drawer. (Fig. 6)

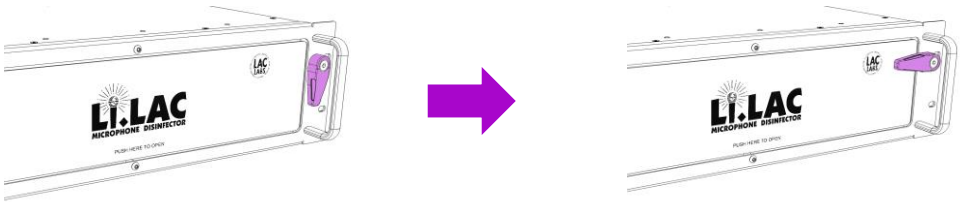

Fig. 6

4.8.2 Storage

1. Remove all lose objects from the irradiation chamber.
2. Separate the device from mains.
3. Store in arid surroundings.

5 Troubleshooting

Problem	Possible cause	Solution
Display does not turn on	No power	1. Check if the device is connected to power outlet. 2. Check if the main fuse was triggered.
Display indicates “Lamp error“	One or both of the UV-C lamps are broken or missing	1. Replace the UV-C lamps. See 6.5, page 22. Or: 2. Send device to service: e-Mail: support@lilac.works https://lilac.works/faq/#support
UV-C lamps are broken or defect	Mechanical impact to UV-C lamps. Heavy vibration	**CAUTION.** Lamp contains mercury. Health hazard. Avoid direct skin contact. For handling of broken UV-C lamps follow instructions (see 7.2, page 30)
Display indicates “Lamp replacement recommended”	UV-C lamps have exceeded 4000 disinfection cycles.	1. Replace the UV-C lamps. See 6.5 page 22. Or: 2. Send device to service: E-Mail: support@lilac.works https://lilac.works/faq/#support
Display indicates “Error XYZ“	Internal error	Contact support: e-Mail: support@lilac.works

6 Maintenance

6.1 Who is permitted to perform Maintenance Work on *Li.LAC*?

Maintenance work on *Li.LAC* may only be performed by specialized personnel or under their supervision. Defective devices may be sent in for service after previous arrangement.

6.2 Service Contact

e-Mail: support@lilac.works
phone: +49-2683-9738938

6.3 Software Update

Upon start-up Li.LAC indicates the current software version in the display. Download the latest firmware here: www.lilac.works/download.

You will need a PC running Windows 10 and a micro-USB cable for the update process.

Notice. Disconnect the device from mains before updating. Keep separated during the whole update process. If not adhered to the device or the PC may be damaged.

1. Download the latest firmware version. Read the **ReadMe**-file.
2. Remove upper housing lid (see 6.5.1, page 22).
3. The micro-USB port is located on the electronic circuit board behind the display (Fig. 7).

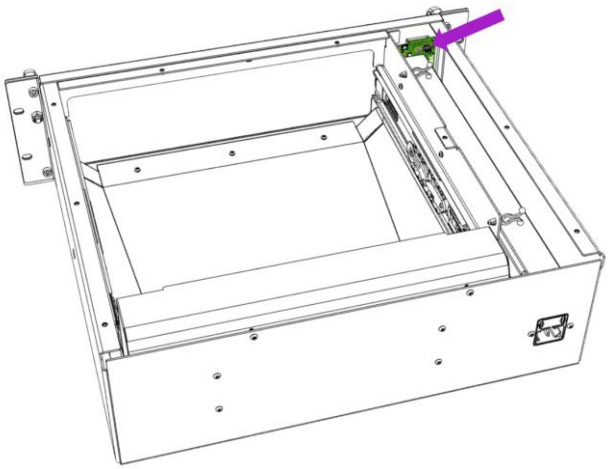

Fig. 7

4. Plug in the micro-USB cable (Fig. 8).

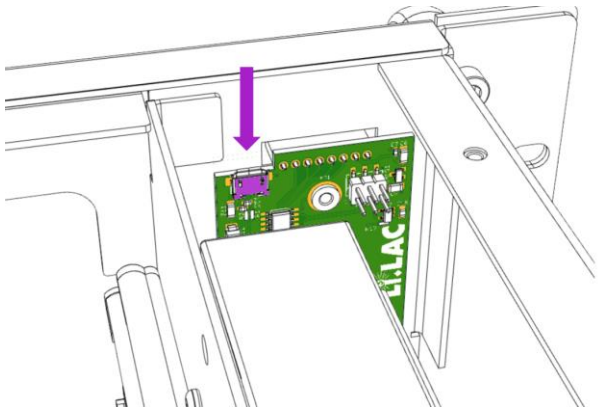

Fig. 8

5. Follow instructions in the **ReadMe**-file.
6. Unplug micro-USB cable when the update process is finished.
7. Close upper housing lid.
8. Connect device to mains.
9. The display now shows the latest firmware version.

6.4 Cleaning the Irradiation Chamber

Notice. Coated mirror surfaces inside the irradiation chamber. See reference information on 0, page 21 before cleaning the irradiation chamber.

6.4.1 Removing the Drawer

1. Unlatch transport lock (see 4.2, page 14).
2. Push at the center of the drawer to open the irradiation chamber.
3. Completely extract drawer.
4. Locate the locking hooks in the lateral telescopic rails (Fig.9). Pull up the left locking hook (1) and push down the right locking hook (2) at the same time. Keep the hooks in this position and pull the drawer forward (3) to remove.

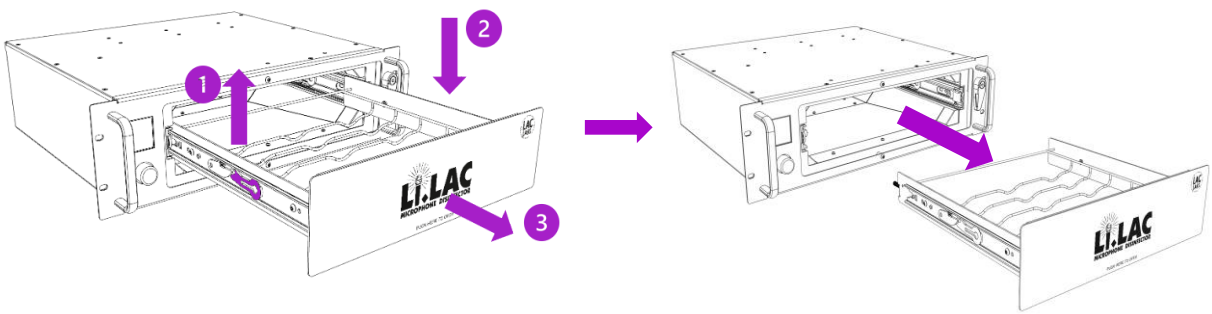

Fig. 9

6.4.2 Cleaning the Mirror Surfaces

- Do not apply pressure while cleaning.
- Only use clean cotton cloths.
- Do not use paper towels.
- Do not use acid-based cleaning agents.
- Do not use neutral or basic cleaning agents.
- Do not use concentrated acid or lye.
- Do not use cleaning alcohol.
- Do not use object-atypical cleaning agents (e.g., furniture polish)

1. Remove loose dirt with pressurized air or with a soft cotton cloth.
2. For minor soiling use diluted lemon-based cleaning agents (observe recommendations by manufacturer of the cleaning agent). Recommended pH value is between 3.0 and 4.5.
3. To clean greasy dirt, use a mixture of water and alcohol (methylated spirit) with a 1:1 ratio.

6.5 Exchanging the UV-C Lamps

6.5.1 Opening the Device

	DANGER. High Voltage. Risk of electric shock. Disconnect device from mains.

	WARNING. Ultraviolet radiation. Health hazard. Disconnect device from mains before opening.

1. Disconnect device from mains.
2. Remove drawer (see 6.4.1, page 21)
3. Remove screws of the upper housing lid (Fig.10)

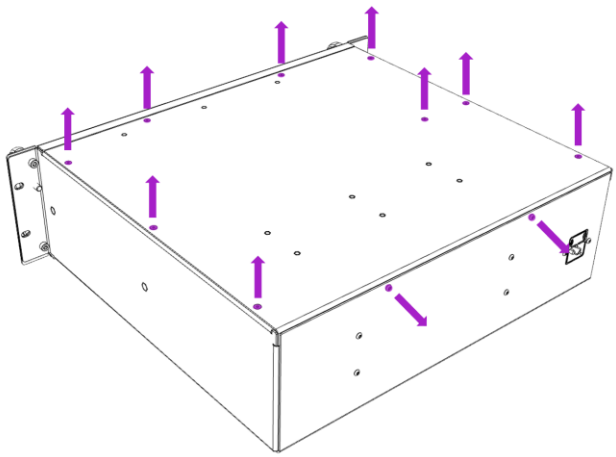

Fig. 10

4. Lift upper housing lid at the rear end (Fig.11)

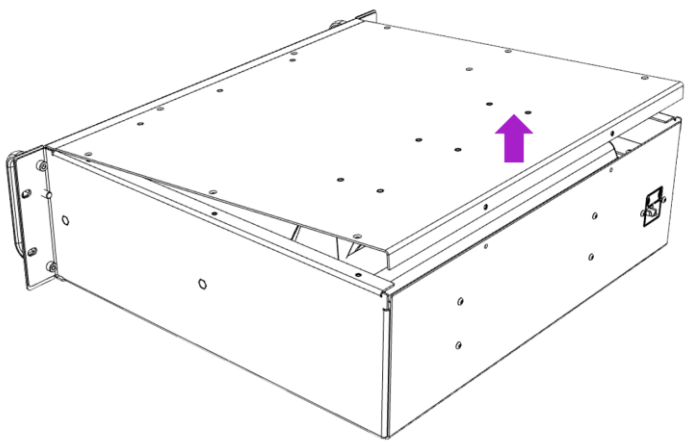

Fig. 11

5. Pull upper housing lid in the direction of arrow (Fig.12)

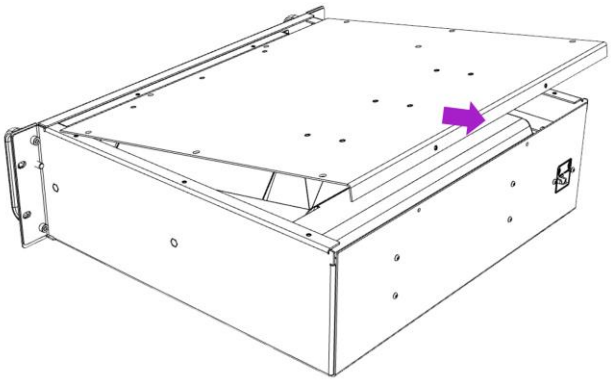

Fig. 12

Notice. Mirror sheets are located directly below the lid. Remove lid carefully to avoid damage to the mirror sheets. Adhere closely to points 6 and 7.

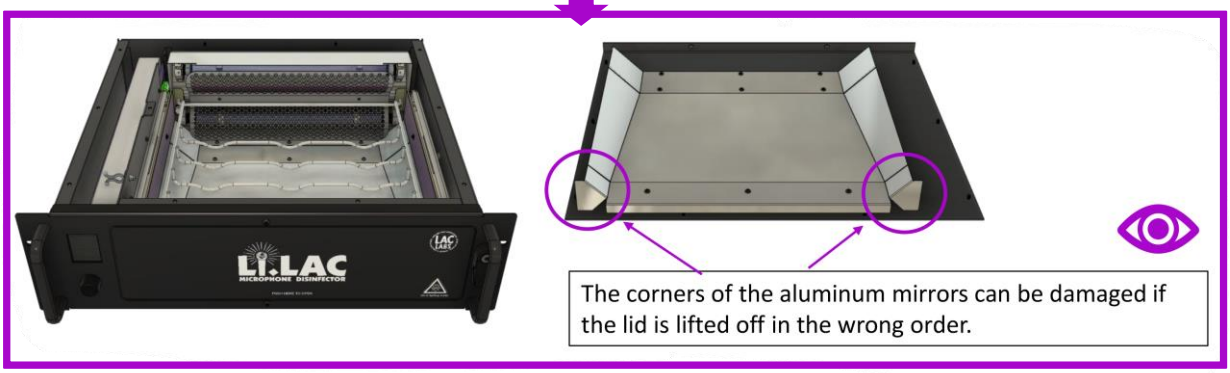

6. Slide upper housing lid in the direction of arrow (Fig. 13)

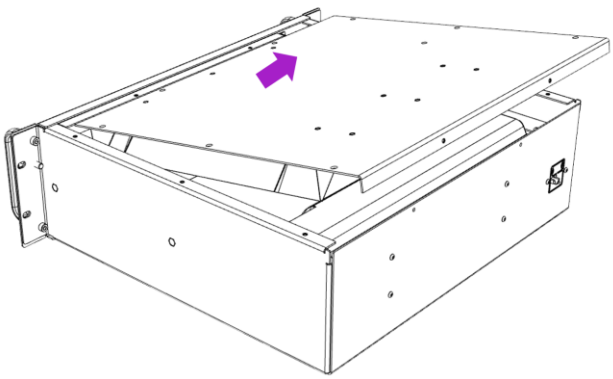

Fig. 13

Notice. Mirror plates directly underneath upper housing lid. Lift carefully.

7. Lift upper housing lid. (Fig. 14)

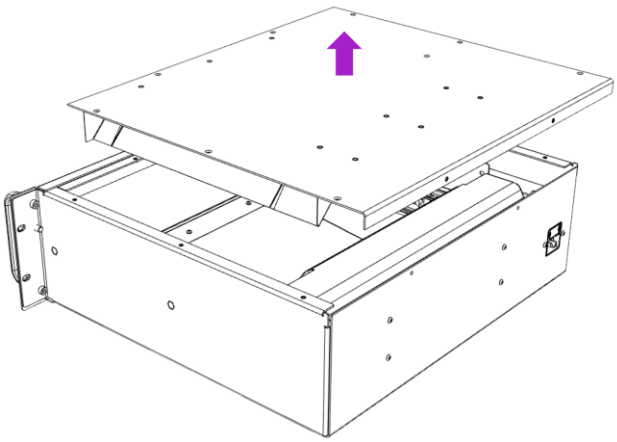

Fig. 14

6.5.2 Removing the UV-C Lamps

1. Remove the screws of the UV-C lamp protection panel (Fig. 15)

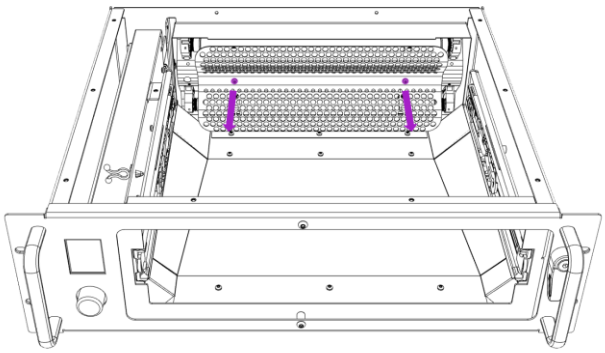

Fig. 15

2. Remove UV-C lamp protection panel (Fig. 16)

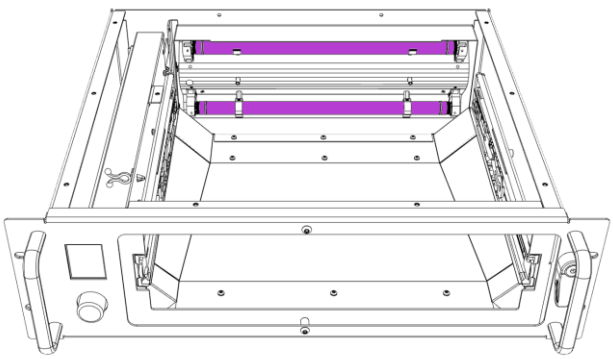

Fig. 16

3. Turn the UV-C lamps in direction of arrow as shown in Fig. 17 (1) until you hear a clicking sound. Remove UV-C lamps in direction of arrow (2). Dispose of the UV-C lamps (see 7, page 30)

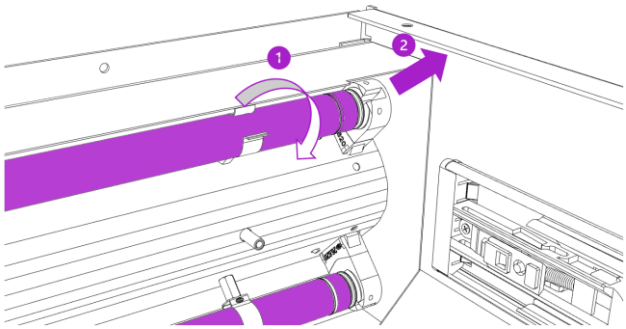

Fig. 17

6.5.3 Installing new UV-C Lamps

Notice. Avoid direct skin contact with UV-C lamps. Wear cotton gloves. Fingerprint grease may shorten life cycle of UV-C lamps.

Notice. Use only UV-C lamps from the same manufacturer. Use either Osram or Philips.

1. Install new UV-C lamps as indicated in Fig. 18 (1). Turn UV-C lamps in direction of arrow (2) until you hear a clicking sound. **Notice: *Li.LAC* will only operate if both UV-C lamps are installed.**

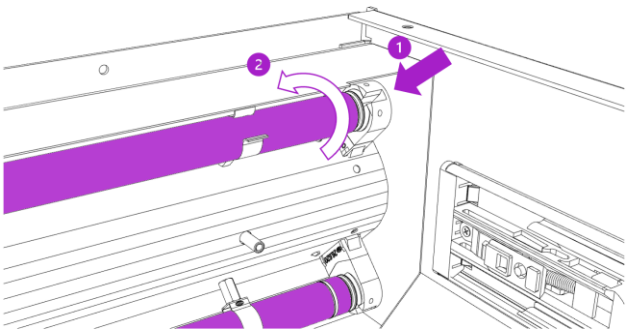

Fig. 18

2. Re-attach UV-C lamp protection panel and re-fit the screws (Fig. 19).

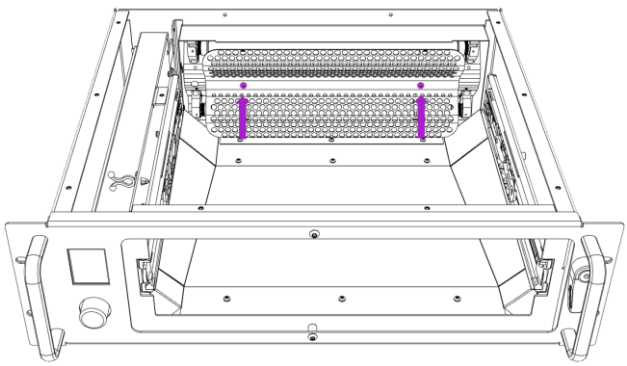

Fig. 19

6.5.4 Closing the device

Notice. Adhere closely to all steps in 6.5.4 to avoid damage to the device.

Note: All steps refer to the perspective of the device's rear view.

1. Put the upper housing lid on the front left edge of the housing. (Fig. 20)

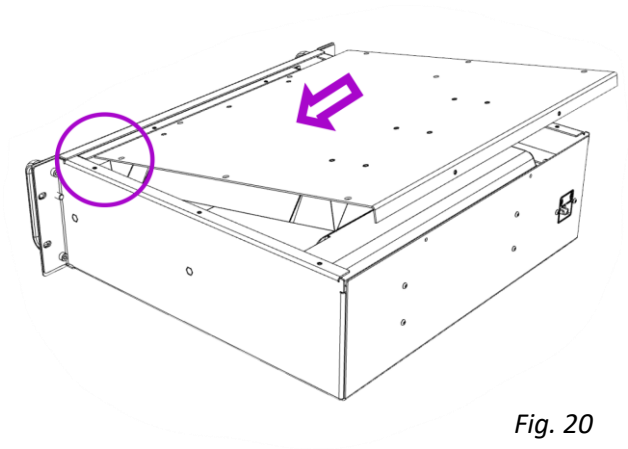

Fig. 20

2. Slide the upper housing lid to the left. Slide the front left mirror edge (1) underneath the left housing flange (2). (Fig. 21)

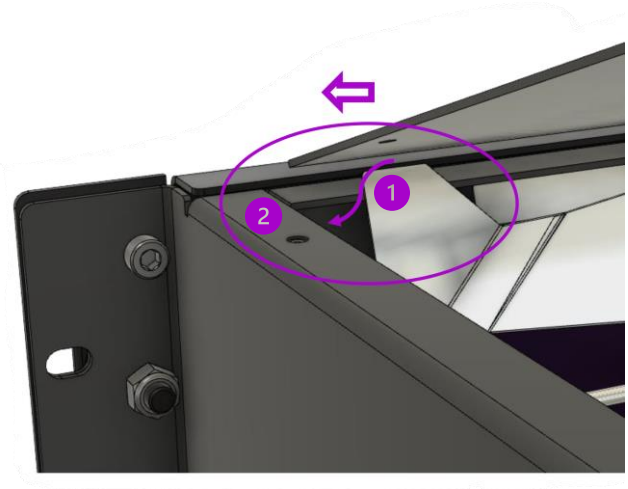

Fig. 21

3. Slide upper housing lid fully in direction of the device's front (Fig. 22). The lid is now sitting on the rear edges the mirror.

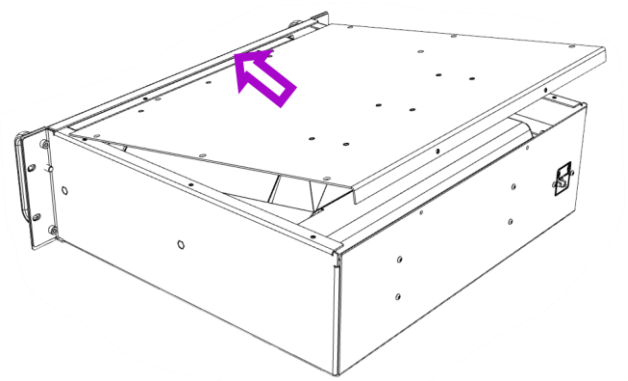

Fig. 22

Notice. To execute step **6.5.4, 4** we recommend using a small hook to.

4. Pull the main reflector HR on both left and right sides towards the rear of the housing using a hook tool. Slide the upper housing lid towards the front of the housing and gently push it downwards. (Fig. 23)

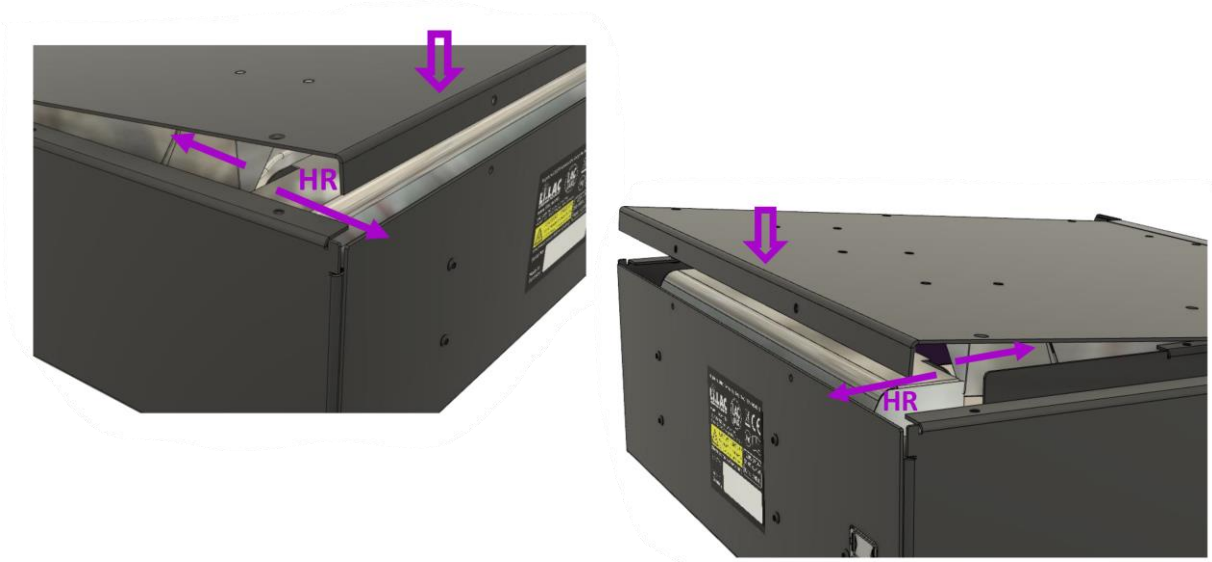

Fig. 23

5. As soon as the rear flange is touching the housing (1), firmly push the upper housing lid downwards. (Fig. 24)

Fig. 24

6.5.5 First Start-up after UV-C Lamp Exchange

1. Push and hold the encoder wheel, while connecting the device to mains. Keep the encoder wheel pushed 5 seconds longer.
2. *Li.LAC* boots in service mode. The display shows lamp start and lamp error counter values.
3. Push the encoder wheel for 5 seconds to reset the counters.
4. *Li.LAC* is operational again.

6.6 Maintenance Schedule

Task	Frequency
Exchanging UV-C lamps	After 4000 cycles
Cleaning the mirror surfaces	When dirty

7 Disposal

Do not dispose of *Li.LAC* in household waste. To minimize environmental pollution, recycle or reuse the device. Follow local disposal regulations and applicable laws.

The UV-C lamps in *Li.LAC* contain mercury and must not be disposed of in household waste. For further disposal information visit www.lamprecycle.org.

7.1 Disposal of UV-C lamps

	Notice. UV-C lamps contain small quantities of mercury. Do not dispose of in household waste.

7.2 Safe handling of defective UV-C lamps

	CAUTION. UV-C lamps contain mercury. Potential health hazard. Avoid direct skin contact. Children have to leave the room immediately.

	CAUTION. Broken glass. Risk of cutting. Wear household gloves.

Visit the website indicated below for further information on safe handling of defective UV-C lamps: https://www.osram-group.com/en/sustainability/environmental/sustainability-criteria/mercury/handling-broken-lamps

7.2.1 What should I do if the Glass of a UV-C Lamp is broken?

Mercury may only leak out if the body of the UV-C lamp is partly or entirely broken. Follow the safety measures stated below, regardless of the amount of mercury contained being very low:

1. Mercury pervades near the ground. Children have to leave the room immediately.
2. Mercury is a liquid in room temperature and vaporizes slowly. Air the room for at least 15 minutes.
3. Make sure there is a sufficient air flow.
4. Wear household gloves to prevent cutting.
5. After the 15 minutes of airing, collect all fragments of the UV-C lamp glass and store them in a closed container (tin can or plastic pouch). Close container firmly.
6. Do not dispose of the remains of the UV-C lamp in household waste. In case you need to store the remains, store them outdoors and keep away from children and pets.

7.2.2 What should I do if the Glass of a UV-C Lamp is broken on a Smooth Surface (laminate floor, parquet floor)?

1. Follow the instructions stated under 7.2.1
2. Sweep together the remains of the UV-C lamp with a piece of sturdy cardboard.
3. Wipe the affected area thoroughly with a household cloth.
4. Do not dispose of the remains of the UV-C lamp in household waste. In case you need to store the remains, store them outdoors and keep away from children and pets.

7.2.3 What should I do if the Glass of a UV-C Lamp is broken on a Carpet?

1. Mercury pervades near the ground. Children have to leave the room immediately.
2. Mercury is a liquid in room temperature and vaporizes slowly. Air the room for at least 15 minutes.
3. Make sure there is sufficient air flow
4. Vacuum-clean the affected area for 5 minutes,
5. Air the room for 15 more minutes.
6. Repeat steps 3 to 5 twice.
7. Thoroughly clean the vacuum cleaner nozzle.
8. Remove the vacuum cleaner bag and dispose of in household waste outside of your living space.

8 Appendix

8.1 Spare Parts and Consumables

Notice. Only use UV-C lamps recommended by the manufacturer.

UV-C lamps:

- OSRAM Puritec HNS 16W G5

- Philips TUV TL-Mini 16W G5

In Europe you can order spare UV-C lamps directly via support@lilac.works.
For the USA: replacement UV-C lamps can be purchased directly from the UV-C lamp manufacturer (OSRAM or Philips).

9 CE Declaration of Conformity

In accordance with the EU Low Voltage Directive 2014/35/EU

Manufacturer:

Company name:	LAC Labs GmbH
Street:	Krummenau 4
City:	53577 Neustadt (Wied)
Country:	Germany

The manufacturer bears sole responsibility for issuing this declaration of conformity.

We hereby declare that the design and construction of the product described below, as well as the version that we have put into circulation, comply with the basic health and safety requirements of the EU Low Voltage Directive. In the event of a change to the product that has not been agreed with us, this declaration becomes invalid.

Product name:	**Li.LAC**
Product description:	device for disinfection of microphones using UV-C-irradiation
Type:	Li.LAC LLMD01
Serial number:	LLMD01-XX-XXX
Manufacturing year:	2021, 2022, 2023

Compliance with other directives / regulations that also apply to the product is declared:

- EU directive EMV 2014/30/EU
- EU directive RoHS 2011/65/EU
- EU directive WEEE 2012/19/EU

Harmonized standards:

- EN 61000-6-3:2007 - EMV
- EN 61000-6-2:2005 - EMV
- EN 62471: 2009 - photobiological safety lamps
- EN 60335 - Safety of electrical devices, part 1
  IEC 60335-2-65:2002, IEC 60335-2-65:2002/AMD1:2008, IEC, 60335-2-65:2002/AMD2:2015 in conjunction with IEC 60335-1:2010, IEC 60335-1:2010/AMD1:2013,
  IEC 60335-1:2010/AMD2:2016
- EN 60598 - Luminaires - Part 1: General requirements and tests
- EN IEC 63000:2018 - RoHS

Neustadt, 03.08.2023

Dipl.-Ing. Tobias Hoff (Managing Director of LAC Labs GmbH)

The CE mark was printed on the nameplate before delivery.

UKCA Declaration of Conformity

Manufacturer:

Company name:	LAC Labs GmbH
Street:	Krummenau 4
City:	53577 Neustadt (Wied)
Country:	Germany

Product name:	**Li.LAC**
Product description:	device for disinfection of microphones using UV-C-irradiation
Type:	Li.LAC LLMD01
Serial number:	LLMD01-XX-XXX
Manufacturing year:	2021, 2022, 2023

This declaration of conformity is issued under the sole responsibility of the manufacturer.

The object of the declaration described above is in conformity with the relevant UK Statutory Instruments (and their amendments):

Safety Electrical Equipment (Safety) Regulations 2016

EMC Electromagnetic Compatibility Regulations 2016

RoHS The Restriction of the Use of Certain Hazardous Substances in Electrical and Electronic Equipment Regulations 2012

References to the relevant designated standards used or references to the other technical specifications in relation to which conformity is declared:

Electrical Equipment (Safety) Regulations 2016	IEC 60335-2-65:2002, IEC 60335-2-65:2002/AMD1:2008, IEC, 60335-2-65:2002/AMD2:2015 in conjunction with IEC 60335-1:2010, IEC 60335-1:2010/AMD1:2013, IEC 60335-1:2010/AMD2:2016
Electromagnetic Compatibility Regulations 2016	EN 61000-6-3:2007 EN 61000-6-2:2005
The Restriction of the Use of Certain Hazardous Substances in Electrical and Electronic Equipment Regulations 2012	EN IEC 63000:2018

First year of labelling with the UKCA mark: 2023

Place and date: Neustadt, August 3rd 2023

Dipl.-Ing. Tobias Hoff (Managing Director of LAC Labs GmbH)

FCC Part15 Class B

RADIO AND TELEVISION INTERFERENCE

This equipment has been tested and found to comply with the limits for a Class B digital device, pursuant to Part 15 of the FCC rules. These limits are designed to provide reasonable protection against harmful interference in a residential installation. This equipment generates, uses and can radiate radio frequency energy and, if not installed and used in accordance with the instructions, may cause harmful interference to radio communications. However, there is no guarantee that interference will not occur in a particular installation. If this equipment does cause harmful interference to radio or television reception, which can be determined by turning the equipment off and on, the user is encouraged to try to correct the interference by one or more of the following measures:

- Reorient or relocate the receiving antenna.

- Increase the separation between the equipment and the receiver.

- Connect the equipment into an outlet on a circuit different from that to which the receiver is connected.

- Consult the dealer or an experienced radio/TV technician for help.

You may also find helpful the following booklet, prepared by the FCC: "How to Identify and Resolve Radio-TV Interference Problems." This booklet is available from the U.S. Government Printing Office, Washington D.C. 20402.

Changes and Modifications not expressly approved by the manufacturer or registrant of this equipment can void your authority to operate this equipment under Federal Communications Commissions rules.

ICES-003, Issue 7, Class B

CAN ICES-3(B)/NMB-3(B)

Australia and New Zealand

Importer: Event Communications Australia PTY LTD
28-32 Exceller Avenue
Bankstown NSW 2200
Australia
ABN 34620780252